Construction and Building Materials 305 (2021) 124730

Contents lists available at ScienceDirect

Construction and Building Materials

journal homepage: www.elsevier.com/locate/conbuildmat

Determining the yield stress of a Biopolymer-bound Soil Composite for extrusion-based 3D printing applications

Adrian Biggerstaff [a,*], Gerald Fuller [b], Michael Lepech [a], David Loftus [c]

[a] Department of Civil and Environmental Engineering, Stanford University, 473 Via Ortega, Stanford, CA 94305, USA
[b] Department of Chemical Engineering, Stanford University, 443 Via Ortega, Stanford, CA 94305, USA
[c] Space Bioscience Research Division, NASA Ames Research Center, Moffett Field, Mountain View, CA 94035, USA

ARTICLE INFO

Keywords:
3D Printing
Yield stress
Biopolymer-bound Soil Composite (BSC)
Rheology

ABSTRACT

Biopolymer-bound Soil Composite (BSC) is a novel class of construction materials with potential use in extra-terrestrial infrastructure development and more sustainable construction on Earth. Little is known about the rheological properties of this new material and its suitability for extrusion-based 3D printing (E3DP). This paper presents methods for testing BSC yield stress and proposes hydrodynamic and frictional yield stress models for predicting the static and dynamic yield stress of BSC mixtures. Using experimental results, a soil volume fraction range for BSC is identified that may be suitable for E3DP based on extrudability and shape stability requirements.

1. Introduction

Extrusion-based 3D printing (E3DP) has emerged in the construction industry as a viable alternative to form-based construction methods such as those typically used for cast-in-place concrete construction. The scale of projects using E3DP construction methods is increasing, and numerous materials are being studied for E3DP applications [1,2]. Such studies find that the material's rheological properties are critical to proper design and control of the printing process. These properties include the yield stress, viscosity, and thixotropy of the material. An E3DP material must have a low enough yield stress and viscosity to be pumped and then extruded [3]. After extrusion, the material must have a sufficiently high yield stress to demonstrate shape stability by supporting its own weight [4]. Throughout this process, for thixotropic materials, the yield stress will range between a static and dynamic yield stress value based on the material's shear history [5]. Therefore, E3DP materials must have a suitable yield stress to balance pumpability with shape stability.[1] From the literature, the yield stress of printable construction materials typically range from the low hundreds to a few thousands of Pa to remain both pumpable, extrudable, and shape stable [3,6]. The material elasticity and the rate in which the material gains strength and stiffness are also important considerations in E3DP [7]; however, these factors are outside the scope of this investigation.

Over the past decade, a growing interest in using biopolymers to stabilize soil for construction applications has emerged and a variety of soil-biopolymer combinations have been researched [8–15]. These Biopolymer-bound Soil Composite (BSC) mixtures are being explored as an alternative to cementitious construction materials for more sustainable construction due to their lower environmental impact [11,16], and some of the BSC mixtures researched have reached compressive strengths that are comparable to that of Ordinary Portland Cement Concrete [15]. Additionally, BSC has potential to be used in extraterrestrial construction to support long duration missions to the moon and mars due to its adoption of In Situ Resource Utilization (ISRU) concepts [17]. BSC mixtures have used polysaccharides and proteins as the biopolymer along with soils that range in cohesion level. However, no BSC using low-cohesion soil, and only one BSC consisting of a cohesive soil [2], have been evaluated for E3DP.

This paper explores the rheological properties of a BSC with low-cohesion soil to assess the feasibility of using it for E3DP. The BSC mixtures discussed in this paper consist of lunar regolith simulant, bovine blood proteins as the binder, and deionized water. The composite material does not include chemical additives that modify strength or rheological properties used in many cementitious and geotechnical materials (e.g., [18,19]).

The results of BSC yield stress testing and modeling are presented.

* Corresponding author.
E-mail address: abigger@stanford.edu (A. Biggerstaff).

[1] In printing cementitious materials, accelerators may be introduced at the extrusion level to allow mixtures with lower yield stress and viscosity to achieve shape stability after being deposited [51]. However, accelerators have not been used for the BSC material discussed in this paper.

https://doi.org/10.1016/j.conbuildmat.2021.124730
Received 22 June 2021; Received in revised form 17 August 2021; Accepted 27 August 2021
Available online 8 September 2021
0950-0618/Published by Elsevier Ltd.

The approaches used to collect the static and dynamic yield stress of various BSC mixtures are described, and hydrodynamic and frictional yield stress models are proposed for determining the static and dynamic yield stress of BSC mixtures. Using experimental results, a soil volume fraction range for BSC is identified that may be suitable for E3DP based on extrudability and early shape stability requirements.

2. BSC-E3DP mixture design considerations

For BSC mixtures using low-cohesion soil, the BSC strength and stiffness originates from the biopolymer forming rigid cross-links that bind the soil particles together—resisting particle translation, rotation, and flow. The BSC strength is dependent on the biopolymer type, biopolymer concentration, soil type, and drying level [10,11,15]. Rosa et al. [15] provides a mixture design guide to achieve the optimal final compressive strength of the BSC used in this paper, which uses a biopolymer to soil concentration of 16.0 wt% and a biopolymer solution concentration of 0.48 [15]. These optimal proportions are defined by several phenomena. First, a biopolymer solution to void volume ratio (V_{bp}/V_v) of unity is enforced to prevent oversaturating the pore spaces of the soil particles. Second, a maximum soil bulk density of 1.57 g/cm^3 for JSC-1A controls the available void space in the mixture.[2] Third, the biopolymer concentration is limited to 48%, above which it results in unmanufacturable mixtures due to rapidly increasing biopolymer solution viscosity [15].

In addition to designing BSC-E3DP mixtures for compressive strength in the dried state, the material must also remain pumpable and extrudable in the wet state. In the wet state, BSC is best described as a jammed system: a material category that encompasses both pastes and granular materials [20]. BSC transitions from a paste-like state to a granular material state with increasing soil volume fraction, and BSC soil volume fraction is controlled by the mixture design and manufacturing method. Manufacturing methods that maximize the soil bulk density to achieve optimal compressive strengths, like the "Double 5 MPA" compaction method used in Rosa et al. [15], also maximizes the BSC soil volume fraction and reduces the materials pumpability and extrudability.

Designing pumpable and extrudable BSC mixtures may result in lower BSC final strength. As a starting point for achieving pumpable and extrudable BSC mixtures, the research presented in this paper limits the BSC soil volume fraction (ϕ_{BSC}) to <80% of the soil's maximum packing fraction (ϕ_{mp})[3]. This limitation follows closely with the recommended packing fraction limit used for sand and gravel in Perrot et al. [2] to ensure pumpability of their raw earth material. This upper soil volume fraction limit reduces the maximum bulk density of the BSC, which also reduces the final strength that the material may achieve using Rosa et al.'s strength design guide. Consequently, BSC-E3DP mixtures are unlikely to achieve the same compressive strengths as the form-based manufacturing methods used in Rosa et al. [15] that permit higher soil volume fractions. Therefore, designers must balance final strength with pumpability and extrudability requirements when developing their BSC-E3DP mixtures.

3. Materials and methods

Seven BSC mixtures were evaluated with a range of proportions of JSC-1A Lunar regolith simulant, bovine blood proteins (tradename: AP920), and deionized water. These mixture designs are shown in Table 1 and were selected to ensure a wide range in soil volume fraction and slump. The mixtures were designed using the methodology presented in Rosa et al. [15] while enforcing the $\phi_{BSC} < \phi_{mp}$ limit presented in Section 2. A maximum compaction density and specific gravity of 1982 kg/m^3 and 2.875 [21], respectively, was used to determine a JSC-1A ϕ_{mp} of 0.689. The BSC mixtures were prepared using the dry blend method [17], and slump testing was performed using the procedure described in Roussel and Coussot [22].

The BSC yield stress was measured using rate-controlled and stress-controlled techniques with a vane geometry and cup on an ARES-G2 Rheometer. The vane geometry was 15 mm in diameter and 38 mm in length while the cup was 30 mm in diameter and 89 mm in depth. As seen in Fig. 1, these dimensions produce sufficient ratios to assume there is no rigid boundary influence on the collected data by not exceeding dimensional limits proposed by Dzuy and Boger [24].

Steady stress sweep (SS) and constant shear rate (CSR) tests were performed on at least three samples for all seven BSC mixtures. The SS measured the static yield stress of the BSC mixtures as described in [25] and presented in [26,27]. The SS started at 0 Pa and increased to a stress level that was twice the estimated yield stress of the tested BSC mixture at a rate of 5 Pa/s. The CSR, as described in [28], was performed on each sample using five different angular velocities: 0.009, 0.007, 0.005, 0.003, and 0.001 rads/s. Each angular velocity was applied for at least 3 min to ensure the sample approached its equilibrium stress value. Samples had 30 s of rest between each shearing iteration. Post-processing software was used to determine the equilibrium stress of each sample. The shear stress values produced during the SS and CSR tests were calculated using the torque conversion method discussed in both [28,29]. Due to shear banding and experimental limitations, the velocity gradients of the samples were not determined. Therefore, shear rate data is presented in terms of angular velocity (rad/s) rather than assuming a representative shear rate.

To simulate an E3DP process prior to yield stress testing, each sample was extruded into the rheometer cup using a Milwaukee M18 extrusion gun (4225 N extrusion force) with round polypropylene nozzles. Mixtures with a moisture content above 24% were extruded with a 9.5 mm diameter nozzle. All other mixtures were extruded using a 25 mm diameter nozzle. Samples were prepared by placing the material in the rheometer cup in three identical lifts. Each lift was rodded 33 mm deep 25 times using laboratory forceps with 3 mm ×0.7 mm tines to ensure the sample filled the cup. Excess material was struck off and the cup was weighed using an Etekcity 5000 g digital scale to determine the sample density. The top 11 mm of the sample was then removed to achieve the appropriate Z_1 cover height of 20 mm (see Fig. 1). After the vane was inserted into the sample, a layer of petroleum jelly was applied to the sample surface to mitigate structure change due to evaporation. The sample was given a two-minute rest period following vane insertion and before testing to allow it to recover from any microstructure damage as commonly performed in the literature (e.g., [30–32]).

4. Results and discussion

The measured yield stress values for the SS and CSR methods are presented in Table 2. The highest torque measurement was <130 mN-m, which is 65% of the ARES-G2′s max torque capacity (200mN-m).

For the SS method, the yield stress was taken as the shear stress value at which the viscosity began a steep descent ($\Delta\mu/\Delta T < 0$). As shown in Fig. 2a, this viscosity value for BSC mixtures with $\phi_{BSC} < 0.52$ corresponded with the peak viscosity value on the curve. The steep descent in viscosity identified the point where the material was unable to resist flow; although, the SS viscosity curves were unlike previous data presented by [26,27] when examining various yield stress materials (e.g., silica gels, 10% suspension of Bentonite, mayonnaise, toothpaste, etc). However, neither Walls et al. nor Barnes attempted the SS test method on granular materials. In their tests, the viscosity remained constant below the yield stress and then rapidly dropped after the yield stress was

[2] JSC-1A is a low-titanium mare regolith simulant developed by the Johnson Space Center and contains major crystalline silicate phases of plagioclase, pyroxene, and olivine [21].

[3] It is important to note that the "mp" subscript is used to distinguish the maximum packing fraction value from the maximum volume fraction (ϕ_m) used later in Equation (1).

Table 1
Biopolymer-Bound Soil Composite (BSC) Mixtures.

Mix Name (JSC1A–BSA–W–…)[1]	Biopolymer Sol. Conc. (% $w/w)_{BP}$	Biopolymer -Soil Ratio $\%w_{BP/S}$	Moisture Content *M.C.*	Density (kg/m^3) ρ	Soil Vol Fraction ϕ_{BSC}	Avg. Slump (mm)[2]	ϕ_{BSC}/ϕ_{mp}
35–20	35.2%	19.9%	36.7%	1454	0.321	39.5	46.6%
35–15	35.0%	14.9%	27.8%	1654	0.402	31.5	58.3%
35–12.5	35.0%	12.4%	23.1%	1793	0.459	26.9	66.6%
35–11	34.5%	11.0%	20.8%	1868	0.494	14.4	71.7%
35–10	35.4%	10.0%	18.3%	1920	0.519	8.7	75.3%
36–10	36.1%	10.0%	17.7%	1920	0.522	7.4	75.8%
38–10	37.9%	10.0%	15.5%	1988	0.548	5.1	79.5%

[1] Mixture Naming Convention: [Soil Type] – [Biopolymer] – [Solvent, water (W)] – [(%$w/w)_{BP}$] – [%$w_{BP/S}$].
[2] Slump values were measured using a 50 mm conical mold specified in ASTM C230 [23].

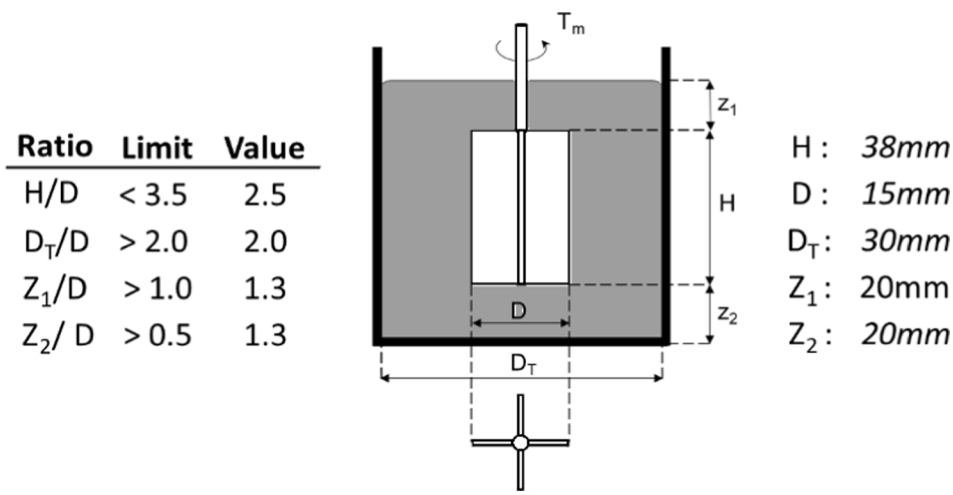

Fig. 1. Schematic of four-blade vane used for BSC yield stress tests showing the vane dimensions along with the limitations set by Dzuy and Boger [24] to mitigate boundary influence during testing.

Table 2
Yield stress values from SS and CSR tests performed on BSC mixtures.

Mix Name (JSC1A–BSA–W–[…]–[…])[1]	*SS (Static)*		*CSR (Dynamic)*		Δ	
	τ_y (Pa)	σ (Pa)	τ_y (Pa)	σ (Pa)	Pa	%
35–20	46	3	6	2	40	88%
35–15	109	8	28	4	81	74%
35–12.5	228	3	103	4	125	55%
35–11	432	15	254	12	177	41%
35–10	844	28	735	80	109	13%
36–10	1149	12	1165	54	−16	−1%
38–10	3644	24	3786	825	−142	−4%

[1] Name Convention: [Soil Type] – [Biopolymer] – [Solvent, water (W)] – [$(\%w/w)_{BP}$] – [$\%w_{BP/S}$].

reached. In contrast, the BSC mixtures studied in this work exhibited an increase in viscosity (shear-thickening effect) until a maximum viscosity was reach, followed by a rapid drop in viscosity. The shear-thickening effect when the material was below the yield stress value can be explained by Barnes' discussion of dilatancy associated with solid particle dispersions [33]. The BSC's drop in viscosity upon reaching the material's yield stress is consistent with the material behaviors reported in [26,27]. It is important to note that the viscosity curves of JSC1A–BSA–W–36–10 and 38–10 ($\phi_{BSC} > 0.52$) contained significant noise due to the stick-slip behavior of the granular material as seen in Fig. 2b. These two mixtures reached, if not exceeded, the upper bound of soil volume fraction that may be used for the SS method.

For the CSR test, all BSC mixtures exhibited a stress response that was dependent on the tested angular velocity, as seen in Fig. 3a. This angular velocity dependency is atypical when compared to the stress response of

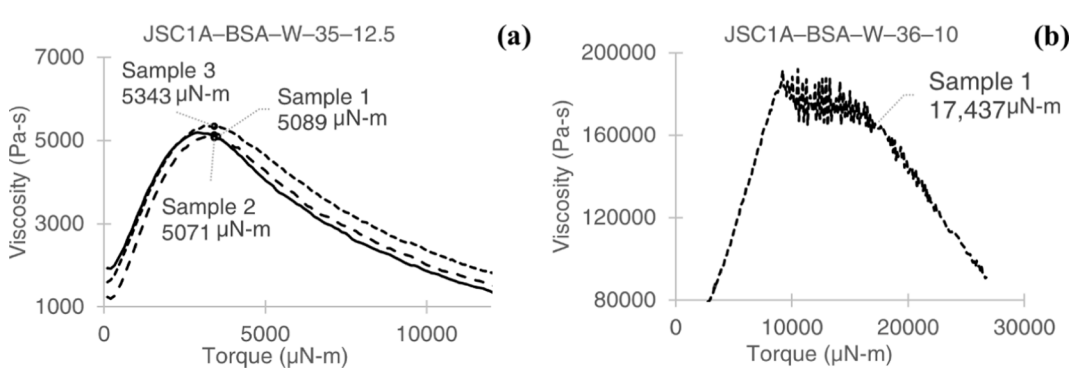

Fig. 2. Representative Steady stress sweep (SS) test results for BSC mixtures with: a) $\phi_{BSC} < 0.52$ and b) $\phi_{BSC} > 0.52$.

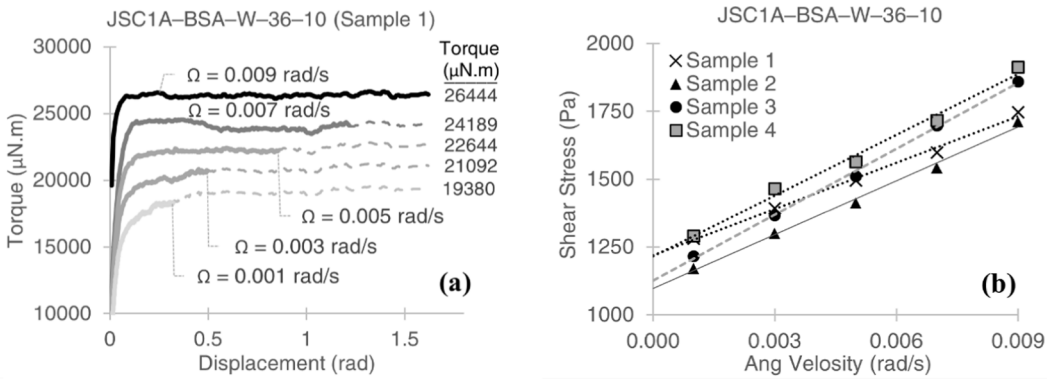

Fig. 3. CSR method: a) equilibrium torque values (later converted to shear stress) measured at angular velocities between 0.001 and 0.009 rad/s for Sample 1 of JSC1A–BSA–W–36–10, b) composite flow curve for all JSC1A–BSA–W–36–10 samples with a Bingham flow curve regression.

cementitious materials [22,31,34], bauxite residue suspensions [28], and glass beads [35] at low angular velocities. These materials all have an angular velocity range within which their shear stress is independent of shear rate. Additionally, the BSC mixtures did not exhibit a peak stress response during the CSR test, which is taken as the static yield stress when seen with some yield stress materials [36]. Instead, the BSC mixtures gradually increased in stress until reaching equilibrium at the corresponding angular velocity. These equilibrium values were used to construct a flow curve and were fitted with the Bingham model as described in [37]. Fig. 3b shows a Bingham flow curve regression of samples from JSC1A–BSA–W–36–10 with dynamic yield stress values ranging from 1097 Pa to 1219 Pa. Therefore, because that BSC mixtures did not exhibit a shear-rate independence or a peak shear stress, neither a static nor dynamic yield stress value could be determined from the CSR test alone. However, the CSR data was useful in determining the dynamic yield stress of the BSC mixtures through a flow curve regression.

As shown in Table 2, the SS method produced a higher yield stress than the CSR method for BSC mixtures with soil volume fractions below 0.52. Above this value, the BSC yield stress values from the two testing methods were within 4% of one another. The higher SS yield stress values are expected considering that the SS method measures the static yield stress when the material is at rest and the microstructure is intact. Conversely, the CSR method measures the dynamic yield stress after the microstructure is broken, a preferential shear plane has been established, and the shear stress has reached an equilibrium value.

The difference between the BSC static and dynamic yield stress decreased as the soil volume fraction in the mixtures increased. Qian and Kawashima [37] found that the discrepancy between the static and dynamic yield stress of cement mortar is related to thixotropy. While thixotropy occurs in cementitious materials through colloidal reflocculation and cement hydration bonding, non-cementitious granular materials may also display a thixotropic behavior due to consolidation rather than chemical bonding [38]. BSC (being a non-cementitious material) could not rely on flocculation or hydration bonding to reform its microstructure given its material constituents. Therefore, it is assumed that BSC must rebuild its microstructure in the wet state through a combination of particle interlock (consolidation) and possibly some biopolymer-soil adhesion. Assuming that consolidation is the primary contributor to thixotropy, it follows that BSC mixtures with lower soil volume fractions are better able to translate and rotate within the biopolymer solution (interstitial fluid) following dilation while higher soil volume fraction mixtures remain fixed in frictional contact with surrounding particles. With rest, the soil particles in the lower soil volume fraction mixtures consolidate and reestablish particle interlock and frictional bonds; meanwhile, the higher soil volume fraction mixtures remain in their consolidated positions. Therefore, the amount of reconsolidation following shearing may be the primary source of the thixotropic behavior of the BSC mixtures and explain the difference in the static and dynamic yield stress values of the mixtures with a $\phi_{BSC} < 0.52$.

5. Yield stress model

The static and dynamic yield stresses of a BSC-E3DP mixture provide a designer important printing parameter limits. The static yield stress may be used to determine if the process equipment is capable of initiating material flow during the pumping and extrusion phases. Additionally, depending on whether the material experiences plug or shear flow during these phases, the static or dynamic yield stress, respectively, provides insight into the material's initial shape stability after deposition [3]. Therefore, modeling the static and dynamic yield stress of BSC can potentially aide in mixture design and printing parameter selection.

Existing models in literature use the particle volume fraction (ϕ) of a suspension to predict yield stress. As the ϕ in a suspension increases to a critical value, the rheological behavior of the suspension transitions from a regime dominated by hydrodynamic interactions between the particles to one dominated by particle friction [39]. Hydrodynamic forces dominate in mixture designs with lower soil volume fractions while particle friction dominates in higher soil volume fraction mixtures. However, a detailed divergence from the hydrodynamic to the frictional regime has not been identified in literature [40]. This section introduces hydrodynamic and frictional yield stress models that will be compared to the yield stress values in Table 2 for the purpose of developing a BSC yield stress model.

5.1. Hydrodynamic regime

Einstein first captured the relationship between viscosity (η) and particle volume fraction (ϕ) for dilute suspensions [41]. Einstein's seminal work has been extended to include additional phenomenological relationships between ϕ and both yield stress and the elastic modulus for noncolloidal particles in yield stress fluids [42]. Mahaut et al. successfully applied the Chateau-Ovarlez-Trung (COT) model (Eq. (1)) to glass beads suspended in a cement paste, bentonite suspensions, emulsions, and carbopol gels [43]:

$$\frac{\tau_c(\phi)}{\tau_c(0)} = \sqrt{(1-\phi)\left(1-\frac{\phi}{\phi_m}\right)^{-[\eta]\phi_m}} \tag{1}$$

Where, $\tau_c(0)$ is the yield stress of the interstitial fluid without the presence of any particles, $\tau_c(\phi)$ is the suspension yield stress as a function of the particle volume fraction, and $[\eta]$ is the intrinsic viscosity (a measure of the particle's contribution to the viscosity of the suspension). The maximum volume fraction (ϕ_m) in the COT model is not the maximum packing fraction but is rather the fraction at which contact between particles starts to generate dominant frictional forces, which is

the application limit of the model [43]. The COT model also assumes no physicochemical interactions in the suspension. Generally, the relationship between particle volume fraction and viscosity or yield stress has assumed smooth spherical particles that have an intrinsic viscosity of $[\eta] = 2.5$. Ivanova and Mechtcherine [44] recently adapted the COT model to account for the rougher particle shapes in concrete and found that an intrinsic viscosity of $[\eta] = 5.1$ was more representative of the sand and gravel within the material.

5.2. Frictional regime

As the volume fraction of particles increases, the yield stress of the material becomes more akin to that of granular materials, where yielding does not occur until static frictional contact between particles is overcome by a sufficient force. In this state, the frictional failure is the result of particles in the granular network slipping past their neighbors causing a dilating effect in the bulk material [35]. As the soil volume fraction increases, greater force is required for the particles to slide past one another resulting in greater dilation and a higher yield stress. De Larrard's (DL) model, originally developed for concrete, accounts for the increased frictional contribution to yield stress by using the ratio of the soil volume fraction (ϕ_i) to maximum soil volume fraction (ϕ_i*)[4] of each material component in the mixture and disregarding hydrodynamic interaction [45]. De Larrad's model is shown as Eq. (2),

$$\tau_0 = f\left(\sum_{i=1}^{n} a_i \frac{\phi_i/\phi_i^*}{1-\phi_i/\phi_i^*}\right) \tag{2}$$

$$\tau_0 = e^{\left(c+\sum_{i=1}^{n} a_i K_i\right)} \tag{3}$$

$$K_i = \frac{\phi_i/\phi_i^*}{1-\phi_i/\phi_i^*} \tag{4}$$

$$a_i = 0.736 - 0.216\log(d_i) \tag{5}$$

where, a_i are particle coefficients that increase with decreasing particle diameter and f is a function. Eq. (3) shows the functional form of De Larrad's model (Eq. (2)) used to model the yield stress of concrete, where c is an additional fitting parameter [46]. The particle coefficient (a_i) and f are calibrated using experimental data, but De Larrard also developed an empirical equation for predicting the particle coefficients, shown as Eq. (5), where d_i is the particle diameter expressed in mm.

5.3. Modeling results

Yield stress measurements obtained from the SS and CSR methods were compared to both the DL (frictional) and COT (hydrodynamic) yield stress models. The DL and COT model parameters (a and η, respectively) were determined by using a nonlinear least-squares fitting technique. The parameters were first fit to the entire data set and then to just the mixtures that were deemed suitable for E3DP applications (discussed in the next section) as shown in Table 3.

For the DL model, the maximum soil volume fraction (ϕ_s*) and c coefficient were determined to be 0.643 and 3.21, respectively, based on using a best-fit technique. The best-fit ϕ_s* was within 6.67% of the calculated ϕ_{mp}. The particle coefficient term (a_i) was set at 0.87 also based on a best fit technique, which is within 8.4% of the 0.95 value calculated using Equation 5 and $d_{50} = 0.098$ mm [47]. The best-fit a, ϕ_s*, and c parameters are identical when fit to both the full range of data and the narrower range data that is suitable for E3DP. This consistency in the parameters indicates that the presented model provides good representation of the static yield stress values across a wide range of BSC soil volume fractions.

Table 3
Parameter values used for fitting the DL (a) and COT (n) models to the SS and CSR yield stress data (all mixtures and only those suitable for E3DP).

Parameter	*Stress Sweep (SS)*		*Constant Shear Rate (CSR)*	
	All Mixtures	E3DP Mixtures	All Mixtures	E3DP Mixtures
a (DL)/R^2	0.87/0.998	0.87/0.997	0.87/0.994	0.85/0.994
η (COT)/R^2	7.85/0.947	7.85/0.965	7.89/0.947	9.42/0.945

For the COT model, ϕ_m was determined to be 0.56 using a best-fit technique, which is consistent with the ϕ_m of other granular materials used with the COT model in literature [43]. The yield stress of the biopolymer solution, $\tau_c(0)$, used in the COT model was 1.26 Pa. This yield stress value was obtained using a Casson fluid model with flow curve data collected on the ARES G2 rheometer. The COT model used an intrinsic viscosity of 7.9 when fit to all BSC mixtures. However, the intrinsic viscosity increased to 9.42 when fit to only the E3DP suitable mixtures. Both intrinsic viscosity values are higher than those used for concrete ($\eta = 5.1$) and spherical glass beads ($\eta = 2.5$), see Fig. 4. The increase in intrinsic viscosity inversely correlates with particle sphericity and size. The sphericity, as defined by [48], is the surface area of a sphere with a volume equivalent to that of the particle, divided by the surface area of the particle. The sphericity of glass beads used in [43] is unity, the average sphericities of the different aggregate sizes used in [44] range from 0.82 to 0.87, and the average sphericity for JSC-1A is 0.80 [49]. In addition to sphericity, the surface area to volume ratio of the JSC-1A greatly exceeded the ratios of the other particles based on particle size alone. With a $d_{50} = 0.098$ mm, the diameter of JSC-1A was 95% smaller than the glass bed diameter used in [43] and 21–98% smaller than the aggregate diameters used in [44]. Therefore, the higher intrinsic viscosity used for the BSC model is consistent with the smaller particle size and sphericity of JSC-1A compared to the intrinsic viscosities and particle sizes of the other materials used in literature.

Fig. 4 compares the measured yield stress data to both the DL and COT models. The DL model shown is fitted to the static yield stress values measured using the SS test, and the COT model is fitted to the dynamic yield stress values measured using the CSR test. Both the DL and COT models provide a good fit to the experimental data as indicated by the R^2 values in Table 3, all of which are >0.94. The DL model, which is the frictional yield stress model, accurately predicts the BSC static yield stress, which is the stress required to overcome the frictional resistance of the granular particles. Similarly, the COT model, which is the hydrodynamic model, accurately predicts the BSC dynamic yield stress, which is the stress required to maintain flow after the static yield stress has been reached and dilation has occurred. However, the close agreement between the COT model and dynamic yield stress values ends at $\phi_{BSC} = 0.52$. Above this soil volume fraction, the DL model better predicts the converging static and dynamic yield stress values. Below $\phi_{BSC} = 0.52$, the hydrodynamic and collisional forces appear to dominate over the frictional forces in the BSC when measuring the dynamic yield stress due to the greater soil particle separation that is allowed within the mixture. Therefore, a $\phi_{BSC} = 0.52$ is taken as the transition point between the hydrodynamic and frictional regimes, and BSC mixtures with $\phi_{BSC} > 0.52$ are not suited for the hydrodynamic model. From these results, the DL model proves to be the appropriate static yield stress model and the COT model proves to be the appropriate dynamic yield stress model up to a $\phi_{BSC} = 0.52$.

5.4. BSC mixture range suitable for E3DP applications

A soil volume fraction range from $0.435 \le \phi_{BSC} \le 0.548$ was identified as potentially being suitable for E3DP based on extrudability and shape stability requirements. To assess the shape stability, a Von Mises yield criterion was used to determine the maximum height (h_{max}) at which a mixture may be printed without experiencing plastic

[4] The maximum soil volume fraction is taken as the maximum packing fraction since only one material component exists in the BSC mixtures.

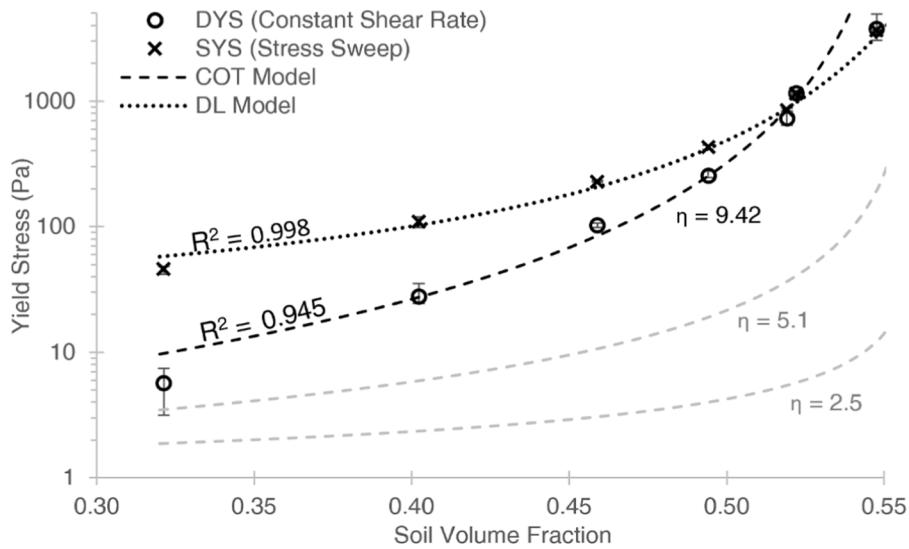

Fig. 4. Chateau-Ovarlez-Trung (COT) and De Larrard (DL) models fit to BSC Static Yield Stress (SYS) and Dynamic Yield Stress (DYS) data.

deformation given a yield stress (τ_y) and mixture density (ρ), as shown in Eq. (6).

$$h_{max} = \frac{\tau_y\sqrt{3}}{\rho g} \tag{6}$$

The h_{max} values attainable for each τ_y are overlayed on a portion of Fig. 4 to produce Fig. 5. Assuming a minimum desirable 3D print height of 5 mm, $\phi_{BSC} = 0.435$ is the lowest value that can achieve this print height using the COT model.

To assess the printability criterion, each BSC mixture in Table 1 was extruded using a Milwaukee M18 extrusion gun with nozzle diameters of 9.5 mm and 25 mm, which are representative of nozzle sizes used in current extrusion processes that use cement mortar for 3D printing [50]. JSC1A–BSA–W–38–10 would only pass through the 25 mm nozzle, and previously tested BSC mixtures with $\phi_{BSC} > 0.548$, would not pass through either nozzle. Therefore, $\phi_{BSC} = 0.548$ was deemed the highest printable soil volume fraction for the range of typical nozzle sizes. This finding supports the recommended pumping threshold of 80% of the maximum packing fraction as JSC1A–BSA–W–38–10 had a $\phi_{BSC}/\phi_{mp} = 79.5\%$. Thus, a BSC-E3DP mixture using JSC-1A soil must have a soil volume fraction (ϕ_{BSC}) between 0.435 and 0.548 to meet the minimum desirable print height and remain extrudable.

6. Design guide for BSC-E3DP mixtures

The following equations provide a model for predicting BSC static yield stress (τ_{sys}) and dynamic yield stress (τ_{dys}) using soil volume fraction (ϕ_{BSC}). These equations come from Eqs. (1 and 3) and are fit to experimental data (Table 3). Eq. (7) predicts τ_{sys} and is intended for assessing the pumpability and extrudability of a BSC mixture, and depending on the level of microstructure break-down during pumping and extruding, either Eq. (7) or Eq. (8) (τ_{dys}) is the appropriate model for determining early shape stability of the BSC mixture. Eq. (7) is applicable over the established E3DP range ($0.435 \le \phi_{BSC} \le 0.548$), while Eq. (8) is only applicable up to the regime transition point ($\phi_{BSC} = 0.52$). Beyond this point, only the τ_{sys}model (Eq. (7)) is representative of the BSC yield stress.

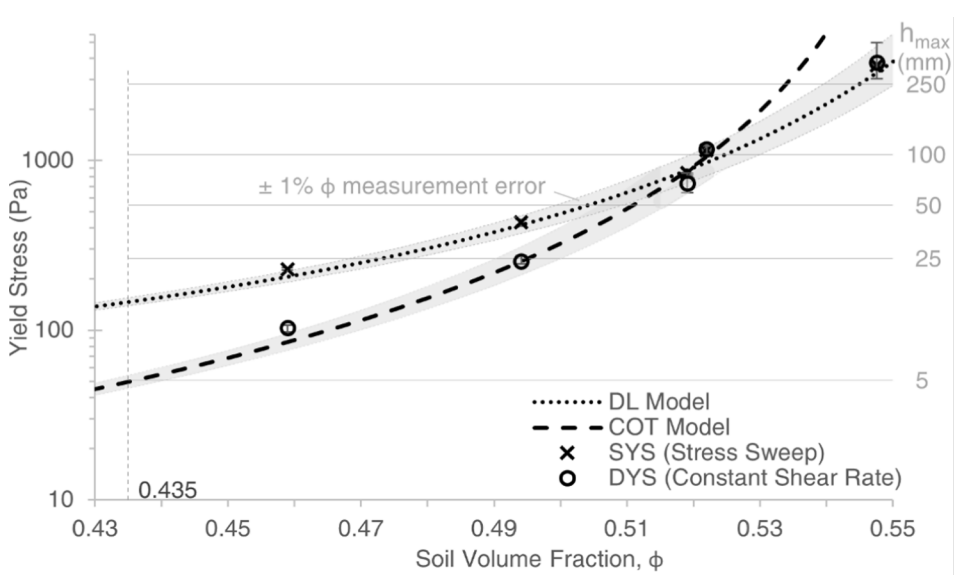

Fig. 5. Chateau-Ovarlez-Trung (COT) and De Larrard (DL) models fit to yield stress data of BSC mixtures with soil volume fractions (ϕ_{BSC}) suitable for E3DP applications. The figure includes error bands resulting from a ± 1% error in measuring ϕ_{BSC}.

$$\tau_{sys} = (1Pa)e^{\left(3.21+0.85\frac{\phi_{BSC}/0.643}{1-\phi_{BSC}/0.643}\right)} \quad 0.435 \le \phi_{BSC} \le 0.548 \tag{7}$$

$$\tau_{dys} = 1.26Pa\sqrt{(1-\phi)\left(1-\frac{\phi_{BSC}}{0.560}\right)}^{-9.42(0.560)} \quad 0.435 \le \phi_{BSC} < 0.520 \tag{8}$$

The BSC yield stress model is increasingly sensitive to ϕ_{BSC} measurement error as the soil volume fraction increases. Fig. 5 displays error bands for the τ_{sys} and τ_{dys} models. These bands mark the range of yield stress values that results from a ± 1% error in measuring ϕ_{BSC}. In the lower ϕ_{BSC} region, the error results in less than a 10% change in yield stress for both models; however, in the upper ϕ_{BSC} region, the error results in a 23% lower to 34% higher yield stress in the DL model. These error bands illustrate that the yield stress models are more sensitive to ϕ_{BSC} measurement error as ϕ_{BSC} increases. Therefore, designers must carefully discern the level of error associated with their method of determining ϕ_{BSC}, especially for higher ϕ_{BSC} mixtures.

7. Conclusion

This paper found that Biopolymer-bound Soil Composite (BSC) using low-cohesion soil is in fact suitable for extrusion-based 3D printing (E3DP) within a soil volume fraction range of $0.435 \le \phi_{BSC} \le 0.548$. The lower bound was based on a Von Mises yield criterion to assess shape stability, and the upper bound was based on extrusion testing. The extrusion testing indicated that 80% of the soil's maximum packing fraction is the upper ϕ_{BSC}limit for BSC-E3DP mixtures, likely resulting in a lower compressive strength of printed BSC compared to similar BSC mixtures manufactured using form-based methods that allow higher ϕ_{BSC} values.

The results of testing the static yield stress (τ_{sys}) and dynamic yield stress (τ_{dys}) of seven BSC mixtures was also presented. The static yield stress values were collected through steady stress sweeps on a rheometer using a vane geometry. The dynamic yield stress was determined using a Bingham flow curve regression on constant shear rate test data. The τ_{sys} and τ_{dys} values converged as BSC soil volume fraction increased, indicating that the thixotropic behavior of BSC is related to the soil volume fraction. Additionally, this paper found that a $\phi_{BSC} = 0.52$ is the transition point between the hydrodynamic and frictional regime when assessing BSC flow.

Hydrodynamic and frictional models were presented as a method for determining the τ_{sys} and τ_{dys} of BSC mixtures. These models were derived using experimental data along with existing models in literature. These models have the potential to aid designers in assessing the printability and shape stability of BSC mixtures.

CRediT authorship contribution statement

Adrian Biggerstaff: Conceptualization, Methodology, Investigation, Writing - original draft. **Gerald Fuller:** Methodology, Supervision. **Michael Lepech:** Resources, Writing - review & editing, Supervision. **David Loftus:** Resources, Supervision.

Declaration of Competing Interest

The authors declare that they have no known competing financial interests or personal relationships that could have appeared to influence the work reported in this paper.

Acknowledgements

The authors would like to thank Dr. Randy Ewoldt for the useful discussion on the topic and acknowledge the John A. Blume Earthquake Engineering Center at Stanford University for laboratory equipment funding. The authors would also like to acknowledge the U.S. Army for partially funding this research through the Advanced Civil Schooling (ACS) program and thank SSERVI-NASA for supplying the JSC-1A. Part of this work was performed at the Stanford Nano Shared Facilities (SNSF), supported by the National Science Foundation under award ECCS-1542152. Any opinions, findings, and conclusions or recommendations expressed in this material are those of the authors and do not necessarily reflect the views of the United States National Science Foundation or United States Army.

References

[1] A. Bajpayee, M. Farahbakhsh, U. Zakira, A. Pandey, L.A. Ennab, Z. Rybkowski, M. K. Dixit, P.A. Schwab, N. Kalantar, B. Birgisson, S. Banerjee, In situ Resource Utilization and Reconfiguration of Soils Into Construction Materials for the Additive Manufacturing of Buildings, Front. Mater. 7 (2020) 52, https://doi.org/10.3389/fmats.2020.00052.
[2] A. Perrot, D. Rangeard, E. Courteille, 3D printing of earth-based materials: Processing aspects, Constr. Build. Mater. 172 (2018) 670–676, https://doi.org/10.1016/j.conbuildmat.2018.04.017.
[3] N. Roussel, Rheological requirements for printable concretes, Cem. Concr. Res. 112 (2018) 76–85, https://doi.org/10.1016/j.cemconres.2018.04.005.
[4] T. Wangler, E. Lloret, L. Reiter, N. Hack, F. Gramazio, M. Kohler, M. Bernhard, B. Dillenburger, J. Buchli, N. Roussel, R. Flatt, Digital Concrete: Opportunities and Challenges, RILEM Tech. Lett. 1 (2016) 67. https://doi.org/10.21809/rilemtechlett.2016.16.
[5] N. Roussel, A thixotropy model for fresh fluid concretes: Theory, validation and applications, Cem. Concr. Res. 36 (10) (2006) 1797–1806, https://doi.org/10.1016/j.cemconres.2006.05.025.
[6] T.T. Le, S.A. Austin, S. Lim, R.A. Buswell, A.G.F. Gibb, T. Thorpe, Mix design and fresh properties for high-performance printing concrete, Mater. Struct. Constr. 45 (8) (2012) 1221–1232, https://doi.org/10.1617/s11527-012-9828-z.
[7] R.J.M. Wolfs, A.S.J. Suiker, Structural failure during extrusion-based 3D printing processes, Int. J. Adv. Manuf. Technol. 104 (1-4) (2019) 565–584, https://doi.org/10.1007/s00170-019-03844-6.
[8] H.R. Khatami, B.C. O'Kelly, Improving Mechanical Properties of Sand Using Biopolymers, J. Geotech. Geoenvironmental Eng. 139 (8) (2013) 1402–1406, https://doi.org/10.1061/(ASCE)GT.1943-5606.0000861.
[9] I. Chang, G.-C. Cho, Geotechnical behavior of a beta-1,3/1,6-glucan biopolymer-treated residual soil, Geomech. Eng. 7 (6) (2014) 633–647.
[10] I. Chang, J. Im, A.K. Prasidhi, G.C. Cho, Effects of Xanthan gum biopolymer on soil strengthening, Constr. Build. Mater. 74 (2015) 65–72, https://doi.org/10.1016/j.conbuildmat.2014.10.026.
[11] M.K. Ayeldeen, A.M. Negm, M.A. El Sawwaf, Evaluating the physical characteristics of biopolymer/soil mixtures, Arab. J. Geosci. 9 (5) (2016), https://doi.org/10.1007/s12517-016-2366-1.
[12] M.U. Qureshi, I. Chang, K. Al-Sadarani, Strength and durability characteristics of biopolymer-treated desert sand, Geomech. Eng. 12 (5) (2017) 785–801.
[13] C.A. Dove, F.F. Bradley, S.V. Patwardhan, Seaweed biopolymers as additives for unfired clay bricks, Mater. Struct. 49 (11) (2016) 4463–4482, https://doi.org/10.1617/s11527-016-0801-0.
[14] I. Chang, M. Jeon, G.-C. Cho, Application of microbial biopolymers as an alternative construction binder for earth buildings in underdeveloped countries, Int. J. Polym. Sci. 2015 (2015) 1–9, https://doi.org/10.1155/2015/326745.
[15] I. Rosa, H. Roedel, M.I. Allende, M.D. Lepech, D.J. Loftus, R. Henning, M.I. Allende, M.D. Lepech, D.J. Loftus, On Designing Biopolymer-Bound Soil Composites (BSC) for Peak Compressive Strength, J. Renew. Mater. 8 (2020) 845–861. https://doi.org/10.32604/JRM.2020.09844.
[16] H. Roedel, I.R. Plata, M. Lepech, D. Loftus, Sustainability assessment of protein-soil composite materials for limited resource environments, J. Renew. Mater. 3 (3) (2015) 183–194, https://doi.org/10.7569/JRM.2015.634107.
[17] M.I. Allende, M.D. Lepech, D.J. Loftus, A performance-based impact engineering framework: A probabilistic approach to quantify micrometeorite damage to lunar surface structures, Proc. Int. Astronaut. Congr. IAC. 1 (2017) 164–172.
[18] B. Panda, J.H. Lim, M.J. Tan, Mechanical properties and deformation behaviour of early age concrete in the context of digital construction, Compos. Part B Eng. 165 (2019) 563–571, https://doi.org/10.1016/j.compositesb.2019.02.040.
[19] A. Perrot, D. Rangeard, A. Levigneur, Linking rheological and geotechnical properties of kaolinite materials for earthen construction, Mater. Struct. Constr. 49 (11) (2016) 4647–4655, https://doi.org/10.1617/s11527-016-0813-9.
[20] P. Coussot, Rheometry of Pastes, Suspensions, and Granular Materials, John Wiley & Sons Inc, Hoboken, NJ, USA (2005), https://doi.org/10.1002/0471720577.
[21] X. Zeng, C. He, H. Oravec, A. Wilkinson, J. Agui, V. Asnani, Geotechnical properties of JSC-1A lunar soil simulant, J. Aerosp. Eng. 23 (2) (2010) 111–116, https://doi.org/10.1061/(ASCE)AS.1943-5525.0000014.
[22] N. Roussel, P. Coussot, "Fifty-cent rheometer" for yield stress measurements: From slump to spreading flow, J. Rheol. 49 (3) (2005) 705–718, https://doi.org/10.1122/1.1879041.
[23] Hydraulic Cement (2013), https://doi.org/10.1520/C0230_C0230M-14.
[24] N.Q. Dzuy, D.V. Boger, Direct Yield Stress Measurement with the Vane Method, Cit. J. Rheol. 29 (3) (1985) 335–347, https://doi.org/10.1122/1.549794.
[25] TA Instruments, RH025 – Rheological Techniques for Yield Stress Analysis, (2020) 5. https://www.tainstruments.com/applications-library-search/(accessed January 12, 2021).

[26] H.J. Walls, S.B. Caines, A.M. Sanchez, S.A. Khan, Yield stress and wall slip phenomena in colloidal silica gels, J. Rheol. 47 (4) (2003) 847–868, https://doi.org/10.1122/1.1574023.
[27] H.A. Barnes, A HANDBOOK OF ELEMENTARY RHEOLOGY, 1st ed., Cambrian Printers, Aberystwyth, 2000.
[28] N.Q. Dzuy, D.V. Boger, Yield Stress Measurement for Concentrated Suspensions, Cit. J. Rheol. 27 (4) (1983) 321–349, https://doi.org/10.1122/1.549709.
[29] ASTM D 4648, Standard Test Methods for Laboratory Miniature Vane Shear Test for Saturated Fine-Grained Clayey Soil, Ratio. (2000) 1–7. https://doi.org/10.1520/D4648_D4648M-16.
[30] Petra V. Liddel, David V. Boger, Yield stress measurements with the vane, J. Nonnewton. Fluid Mech. 63 (2-3) (1996) 235–261, https://doi.org/10.1016/0377-0257(95)01421-7.
[31] J.J. Assaad, J. Harb, Y. Maalouf, Measurement of yield stress of cement pastes using the direct shear test, J. Nonnewton. Fluid Mech. 214 (2014) 18–27, https://doi.org/10.1016/j.jnnfm.2014.10.009.
[32] A.E. James, D.J.A. Williams, P.R. Williams, Direct measurement of static yield properties of cohesive suspensions, Rheol. Acta. 26 (5) (1987) 437–446, https://doi.org/10.1007/BF01333844.
[33] H.A. Barnes, Shear-Thickening ("Dilatancy") in Suspensions of Nonaggregating Solid Particles Dispersed in Newtonian Liquids, J. Rheol. 33 (2) (1989) 329–366, https://doi.org/10.1122/1.550017.
[34] Elton Bauer, Jose G.G. de Sousa, Elvio A. Guimarães, Francisco Gabriel S. Silva, Study of the laboratory Vane test on mortars, Build. Environ. 42 (1) (2007) 86–92, https://doi.org/10.1016/j.buildenv.2005.08.016.
[35] R.C. Daniel, A.P. Poloski, A.E. Sáez, Vane rheology of cohesionless glass beads, Powder Technol. 181 (3) (2008) 237–248, https://doi.org/10.1016/j.powtec.2007.05.003.
[36] Howard Anthony Barnes, Quoc Dzuy Nguyen, Rotating vane rheometry-a review, J. Nonnewton. Fluid Mech. 98 (1) (2001) 1–14, https://doi.org/10.1016/S0377-0257(01)00095-7.
[37] Y. Qian, S. Kawashima, Distinguishing dynamic and static yield stress of fresh cement mortars through thixotropy, Cem. Concr. Compos. 86 (2018) 288–296, https://doi.org/10.1016/j.cemconcomp.2017.11.019.
[38] C.-H. Jeon, B.R. Hodges, Comparing thixotropic and Herschel-Bulkley parameterizations for continuum models of avalanches and subaqueous debris flows, Hazards Earth Syst. Sci. 18 (2018) 303–319, https://doi.org/10.5194/nhess-18-303-2018.
[39] Joumana Yammine, Mohend Chaouche, Michel Guerinet, Micheline Moranville, Nicolas Roussel, From ordinary rhelogy concrete to self compacting concrete: A transition between frictional and hydrodynamic interactions, Cem. Concr. Res. 38 (7) (2008) 890–896, https://doi.org/10.1016/j.cemconres.2008.03.011.
[40] François Boyer, Élisabeth Guazzelli, Olivier Pouliquen, Unifying suspension and granular rheology, Phys. Rev. Lett. 107 (18) (2011), https://doi.org/10.1103/PhysRevLett.107.188301.
[41] A. Einstein, Eine neue Bestimmung der Moleküldimensionen, Ann. Phys. 324 (2) (1906) 289–306, https://doi.org/10.1002/(ISSN)1521-388910.1002/andp.v324:210.1002/andp.19063240204.
[42] Xavier Chateau, Guillaume Ovarlez, Kien Luu Trung, Homogenization approach to the behavior of suspensions of noncolloidal particles in yield stress fluids, J. Rheol. 52 (2) (2008) 489–506, https://doi.org/10.1122/1.2838254.
[43] Fabien Mahaut, Samir Mokéddem, Xavier Chateau, Nicolas Roussel, Guillaume Ovarlez, Effect of coarse particle volume fraction on the yield stress and thixotropy of cementitious materials, Cem. Concr. Res. 38 (11) (2008) 1276–1285, https://doi.org/10.1016/j.cemconres.2008.06.001.
[44] Irina Ivanova, Viktor Mechtcherine, Effects of volume fraction and surface area of aggregates on the static yield stress and structural build-up of fresh concrete, Materials (Basel). 13 (7) (2020) 1551, https://doi.org/10.3390/ma13071551.
[45] F. De Larrard, Concrete Mixture Proportioning, 1st Editio, CRC Press, London (1999), https://doi.org/10.1201/9781482272055.
[46] C.F. Ferraris, F. de Larrard, Testing and modelling of fresh concrete rheology, Gaithersburg, MD (1998), https://doi.org/10.6028/NIST.IR.6094.
[47] D.S. Mckay, J.L. Carter, W.W. Boles, C.C. Allen, J.H. Allton, JSC-1: A New Lunar Soil Simulant, Lunar Planet. Inst., Twenty-Fourth Lunar Planet. Sci. Conf. (1993) 963–964. http://ares.jsc.nasa.gov/HumanExplore/Exploration/EXLibrary/DOCS/EIC050.HTML (accessed January 21, 2020).
[48] Hakon Wadell, Sphericity and Roundness of Rock Particles, J. Geol. 41 (3) (1933) 310–331, https://doi.org/10.1086/624040.
[49] E.J. Garboczi, Three dimensional shape analysis of JSC-1A simulated lunar regolith particles, Powder Technol. 207 (1-3) (2011) 96–103, https://doi.org/10.1016/j.powtec.2010.10.014.
[50] R.A. Buswell, W.R. Leal de Silva, S.Z. Jones, J. Dirrenberger, 3D printing using concrete extrusion: A roadmap for research, Cem. Concr. Res. 112 (2018) 37–49, https://doi.org/10.1016/j.cemconres.2018.05.006.
[51] Hoseong Jeong, Sun-Jin Han, Seung-Ho Choi, Yoon Lee, Seong Yi, Kang Kim, Rheological property criteria for buildable 3D printing concrete, Materials (Basel). 12 (4) (2019) 657, https://doi.org/10.3390/ma12040657.